DRYING

—

STACK DRYERS
ADVANCE
SR-2-11/14/18 TP2 XP



CHARACTERISTICS

TP2
- 7" colour touch screen, programmable and easy to use.
- USB connection.
- FAGORKONNECT - Includes online platform for programming, telemetry, data analysis... via IoT.
- On-screen videos: announcements, instructions (useful for self-service).
- 37 languages

OUTSTANDING FEATURES
- FREQUENCY INVERTER - Standard inversion of rotation.
- STAINLESS DRUM - Stainless steel drum standard.
- Frequency inverter standard.

EFFICIENCY
- MIXED FLOW - Axial-radial airflow system.
- EFFICIENT AIRFLOW - Large debris filter.

VERSATILITY
- Tailor-made - Customisation.
- WET CLEANING.
- OPL > Self-Service - The standard OPL dryer convertible to self-service version.

CONNECTIVITY
- IIoT FagorKonnect standard.
- Laundry management: OPL and self-service.
- Remote payment (self-service).

ERGONOMICS
- **Stainless steel filter drawer.**
- **Large door diameters.**
- **180º opening hinges.**

MAINTENANCE
- Hinged panel: easy and ergonomic access.
- Technical menu: statistics, for technicians and maintenance.

OTHERS
- Grey skinplate cabinet, stainless steel effect.
- SOFT TOUCH - Drum with recessed perforations.
- COOL DOWN - Cooling at the end of the cycle.
- Available in electric or gas heating.
- CE approved.

OPTIONS

- iDRY - Intelligent humidity control. With temperature control at drum air inlet.
- Double glazed door.
- FIRE KARE - Integrated fire protection system.
- Tropicalised model.
- Opposing door opening.
- Dosing/spraying.
- Stainless steel cabinet.
- Stainless steel front panel
- Wooden packaging.
- Rear panel external air inlet + filter.
- Filter borras with 0,3 mm mesh (standard 0,6mm).
- Maritime voltage for electric models: 440V III 50/60 Hz No N.
- Other voltages available.

	U.	SR-2-11 TP2 XP		SR-2-14 TP2 XP		SR-2-18 TP2 XP	
CAPACITY							
Capacity 1/18	Kg	11,7 x 2		15 x 2		18,3 x 2	
	Lb	25,8 x 2		33,1 x 2		40,4 x 2	
Capacity 1/20	Kg	10,5 x 2		13,5 x 2		16,5 x 2	
	Lb	23,1 x 2		29,8 x 2		36,4 x 2	
DRUM							
Ø Drum	mm	750		750		750	
	inch	29,5		29,5		29,5	
Drum length	mm	475		610		746	
	inch	18,7		24		29,4	
Drum volume	l	210		270		330	
	cu ft	7,41		9,53		11,64	
Ø Door	mm	574		574		574	
	inch	22,6		22,6		22,6	
Floor to door center	mm	547 / 1522		547 / 1522		547 / 1522	
	inch	21,54 / 59,92		21,54 / 59,92		21,54 / 59,92	
Floor to lower part of the door	mm	189 / 1164		189 / 1164		189 / 1164	
	inch	7,32 / 45,83		7,32 / 45,83		7,32/45,83	
ELECTRIC POWER							
Installed heating power	kW	12 x 2		18 x 2		18 x 2	
Installed electrical power	kW	25,34		37,34		37,34	
Evaporation capacity	l/h*	27 (13,5 x 2)		29 (14,5 x 2)		31 (15,5 x 2)	
	USgallon/h*	7,13 (3,56 x 2)		7,66 (3,83 x 2)		7,93 (3,96 x 2)	
Hourly output	Kg/h**	54 (27 x2)		58 (29 x 2)		62 (31 x 2)	
	Lb/h**	119 (59,5 x 2)		127,9 (64 x 2)		132,2 (66,1 x 2)	
Drum motor power	kW	0,37 x 2		0,37 x 2		0,37 x 2	
GAS POWER							
Installed heating power gas	kcal/h***	17627 x 2		17627 x 2		17627 x 2	
	Btu/h***	69996 x 2		69996 x 2		69996 x 2	
	kW***	20,5 x 2		20,5 x 2		20,5 x 2	
Installed electrical power	KW	1,34		1,34		1,34	
Instant propane gas consumption (G31)	Kg/h	1,76 x 2		1,76 x 2		1,76 x 2	
	Lb/h	3,88 x 2		3,88 x 2		3,88 x 2	
Instant natural gas consumption (G20)	m³/h	2,17 x 2		2,17 x 2		2,17 x 2	
	cfm	1,28 x 2		1,28 x 2		1,28 x 2	
Evaporation capacity	l/h	30,8 (15,4 x 2)		31,4 (15,7 x 2)		32 (16 x 2)	
	USgallon/h	8,1 (4,05 x 2)		8,28 (4,14 x 2)		8,44 (4,22 x 2)	
Hourly output	Kg/h	61,6 (30,8 x 2)		62,8 (31,4 x 2)		64 (32 x 2)	
	Lb/h	135,4 (67,7 x 2)		138,4 (69,2 x 2)		141,8 (70,9 x 2)	
Ø Gas inlet	BSPP ISO 228-1	3/4"		3/4"		3/4"	
VENTILATION							
Nominal air flow	m³/h	500 x 2		500 x 2		500 x 2	
	cfm	294,28 x 2		294,28 x 2		294,28 x 2	
Air outlet Ø	mm	200 x 2		200 x 2		200 x 2	
	inch	7,87		7,87		7,87	
Fan motor power	kW	0,25 x 2		0,25 x 2		0,25 x 2	
HEAT DISSIPATION							
Total max heat dissipation	kW	3,3		3,3		3,3	
	Btu/h	11198		11198		11198	
Front pannel max heat dissipation	kW	1,2		1,2		1,2	
	Btu/h	4199		4199		4199	
CONNECTIONS		ELECTRICAL	GAS	ELECTRICAL	GAS	ELECTRICAL	GAS
Tension 230V - I + N + G	Nº x mm2 / A	-	3 x 2.5 / 16	-	3 x 2.5 / 16	-	3 x 2.5 / 16
Tension 230V - III + G	Nº x mm2 / A	4 x 25 / 80	3 x 2.5 / 16 (5*)	4 x 50 / 125	3 x 2.5 / 16 (5*)	4 x 50 / 125	3 x 2.5 / 16 (5*)
Tension 400V - III + N + G	Nº x mm2 / A	5 x 16 / 50	3 x 2.5 / 16 (6*)	5 x 16 / 63	3 x 2.5 / 16 (6*)	5 x 16 / 63	3 x 2.5 / 16 (6*)

DIMENSIONS / PACKING DIMENSIONS				
Net width / Gross width	mm	785 / 865	785 / 865	785 / 865
	inch	30,9 / 34,1	30,9 / 34,1	30,9 / 34,1
Net depth / Gross depth	mm	1001 / 1084	1135 / 1218	1271 / 1354
	inch	39,4 / 42,7	44,7 / 48	50 / 53,3
Net height / Gross height	mm	1980 / 2126	1980 / 2126	1980 / 2126
	inch	78 / 83,7	78 / 83,7	78 / 83,7
Net weight / Gross weight	Kg	284 / 295	299/ 312	329 / 329
	Lb	626 / 650	659 / 688	692 / 725
OTHERS				
Sound level	dB	64	64	64

* Drying conditions: full load (1/20) of towels, drying temperature 90ºC.

** Kg dry linen per hour. Drying conditions: full load (1/20) of towels, drying temperature 90ºC.

*** Calculation of thermal power from PCI.

(5*) Connect 2 phases and land.

(6*) Connect phase, neutral and land.

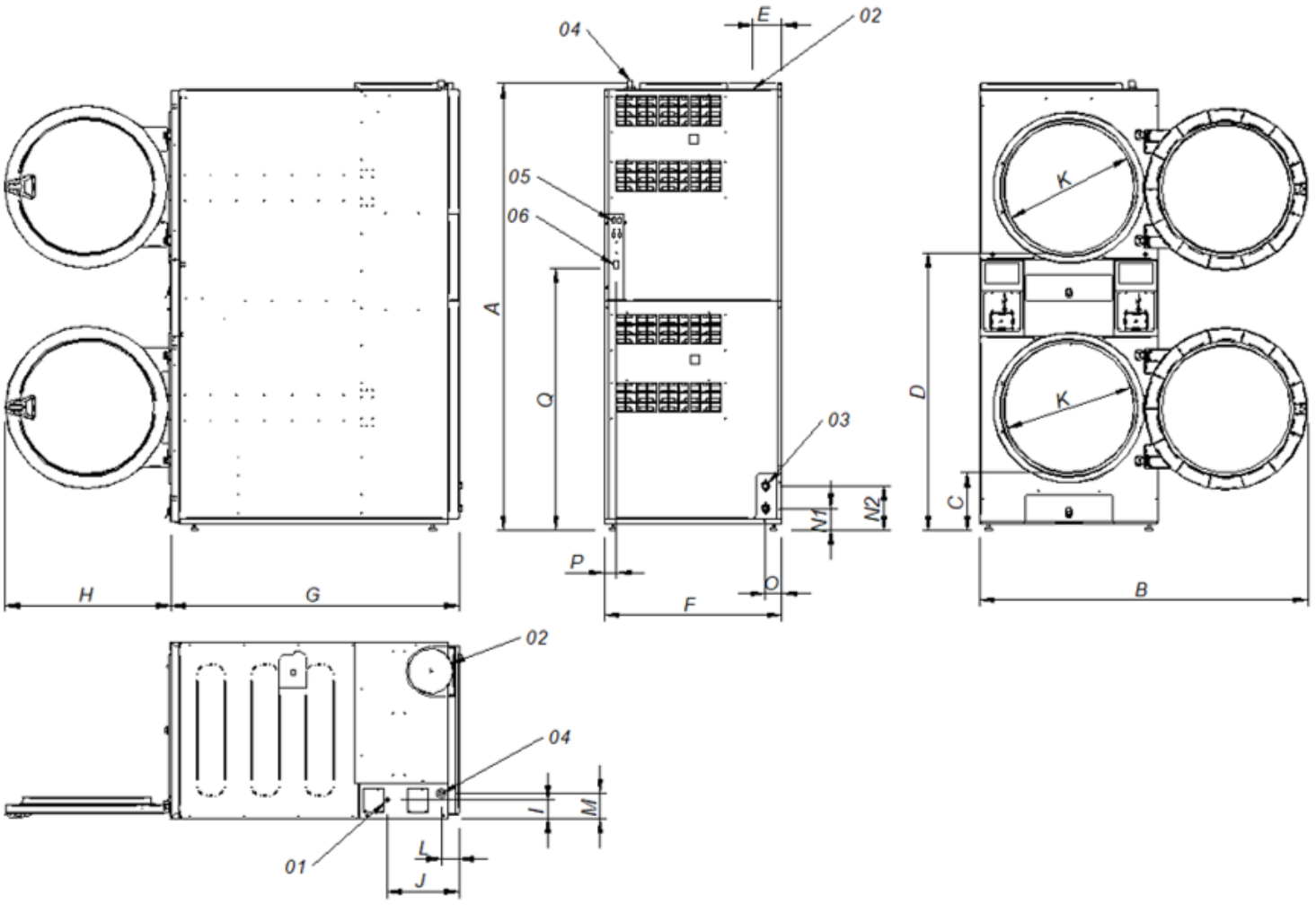

01. Electrical connection
02. Vapour outlet Ø200
03. 2 fire valves 3/4".
04. Gas inlet 3/4".
05. Ethernet connection (only available on models with TP2 control)
06.ON/OFF control switch

	A	B	C	D	E	F	G	H	I	J	K	L	M	N1	N2	O	P	Q
SR-2-11 TP2 XP	1994	1447	259	1234	131	785	1001	735	83	318	575	77	113	97	197	73	54	1163
SR-2-14 TP2 XP	1994	1447	259	1234	131	785	1135	735	83	318	575	77	113	97	197	73	54	1163
SR-2-18 TP2 XP	1990	1447	259	1234	131	785	1271	735	83	318	575	77	113	97	197	73	54	1163