PROFESSIONAL LAUNDRY

—

PROFESSIONAL DRYERS
ADVANCE
SRP-08/10 TP2



CHARACTERISTICS

TP2
- User friendly and totally programmable 7”.
- USB Connection. Online platform free of charge for programming, telemetry, data analysis…thanks to the IoT.
- On-screen videos: announcements, instructions (useful for self-service).
- 37 languages.
- 8 dosing signals as standard.

VERSATILITY
- OPL <> COIN
  Standard models can be programmed as OPL or coin laundry version, central pay, etc.
- SINGLE <> STACKED
  Models can be stacked on top of a washer or on another dryer.
- Reversible control panel: the control panels can be mounted between the two drums for better ergonomics.
- Ideal for multiple solutions: hotels, hostels, campings, coin laundries, facility services (mops), gyms, etc.

HIGH FEATURES
- Short drying cycles (less than 45 minutes). 6.75 kW heating, option of 4.5 kW.

CONNECTIVITY
- IoT - FagorKonnect standard.
- Managemant of laundries: OPL and COIN.
- Remote payment.

EFFICIENCY
- Optimised airflow.
- Axial airflow.
- Wide fluff filter as drawer.
- Efficient design.

ROBUSTNESS
- Outer casing in grey skinplate.
- Robust aluminium big door.
- Industrial fan and powerful airflow.
- Sturdy construction of the dryer structure and panels..

OTHERS
- Galvanised drum.
- Models with electric or gas heating.
- Grey skinplate panels.
- CE approved product.

OPTIONS

- iDRY: intelligent humidity control. With temperature control on the drum air inlet.
- Base for better ergonomics skinplate.
- Ergonomic base in stainless steel.
- Drum in stainless steel AISI 304.
- External cabinet in stainless steel.
- Reversible door opening.
- Control panel on the bottom (stacked dryer).
- Tropicalised model: protected plate.
- Order in complete container + compact packaging.
- Marine voltage 440V III 50/60 Hz No neutral.
- Token/coin kit.

TECHNICAL DATA
PROFESSIONAL DRYERS | ADVANCE | SRP-08/10 TP2

	U.	SRP-08 TP2		SRP-10 TP2	
CAPACITY & DRUM					
Capacity 1:20	Kg	8		10	
	Lb	17,6		22	
Volume	l	160		200	
	ft	5,65		7,06	
Drum diameter Ø	mm	590		590	
	inch	23,23		23,23	
Drum depth	mm	585		690	
	inch	23		27,2	
DOOR					
Height center door	mm	554		554	
	inch	21,8		21,8	
Height base door	mm	320		320	
	inch	12,6		12,6	
Door diameter Ø	mm	480		480	
	inch	18,9		18,9	
GENERAL DETAILS					
Control TP2	-	Yes		Yes	
USB connection	-	Yes		Yes	
Construction	-	Skinplate panels		Skinplate panels	
Plinth	-	Opt		Opt	
Coin laundry version	-	Yes		Yes	
Noise level	dB	62		62	
POWER					
Motor	kW	0,37		0,37	
Electric heating	kW	6,75 / 4,5		6,75 / 4,5	
Gas heating	kW	6,7		6,7	
CONNECTIONS		ELECTRIC	GAS/STEAM	ELECTRIC	GAS/STEAM
Tension 230V I+N+T 50Hz / 60Hz	Nº x mm2/A	3 x 10 / 40A	3 x 1,5 / 10A	3 x 10 / 40A	3 x 1,5 / 10A
Tension 230V III+T 50Hz / / 60Hz	Nº x mm2/A	4 x 4 / 25A	3 x 1,5 / 10A	4 x 4 / 25A	3 x 1,5 / 10A
Tension 400V III+N+T 50Hz / / 60Hz	Nº x mm2/A	5 x 2,5 / 16A	3 x 1,5 / 10A	5 x 2,5 / 16A	3 x 1,5 / 10A
Fume exhaust Ø	mm	100		100	
Maximum airflow	m³/h	300		300	
CONNECTIONS					
Electric heating consumption	kW	6,75 / 4,5		6,75 / 4,5	
Instantaneous propane gas consumption	Kg/h	0,57		0,57	
Instantaneous natural gas consumption	m³/h	0,71		0,71	
DIMENSIONS / PACKING DIMENSIONS					
Net width / Gross width	mm	680 / 710		680 / 710	
	inch	26,77 / 27,95		26,77 / 27,95	
Net depth / Gross depth	mm	722 / 832		775 / 832	
	inch	28,43 / 32,76		30,51/ 32,76	
Net height / Gross Height	mm	1.056 / 1.141		1.056 / 1.141	
	inch	41,57 / 44,92		41,57 / 44,92	
Net weight / Gross weight	Kg	89 / 100,5		92,6 / 104,1	
	Lb	196,21 / 221,56		204,15 / 229,5	

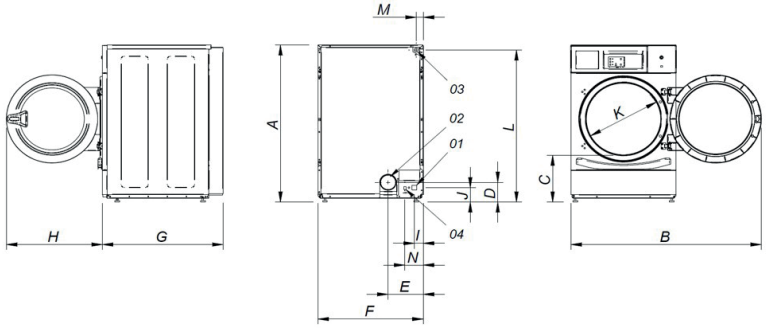

01. Electrical connection
02. Exhasust outlet Ø100
03. Gas inlet 1/2”
04. Ethernet connection

	A	B	C	D	E	F	G	H	I	J	K	L	M	N
SRP-08	1.056	1.227	320	140	226	680	722	615	57	91	480	1.015	50	118
SRP-10	1.056	1.227	320	140	226	680	775	615	57	91	480	1.015	50	118